KU LEUVEN

CREO as a tool for virtual prototyping.

Dr ing. Peter Arras
KU Leuven – technology campus De Nayer

Contents

- History of design
- History of CAD
- From drawing oriented design to model oriented design
- Introduction to CREO
- Case study

History of design.

- Drawing is method of communication.

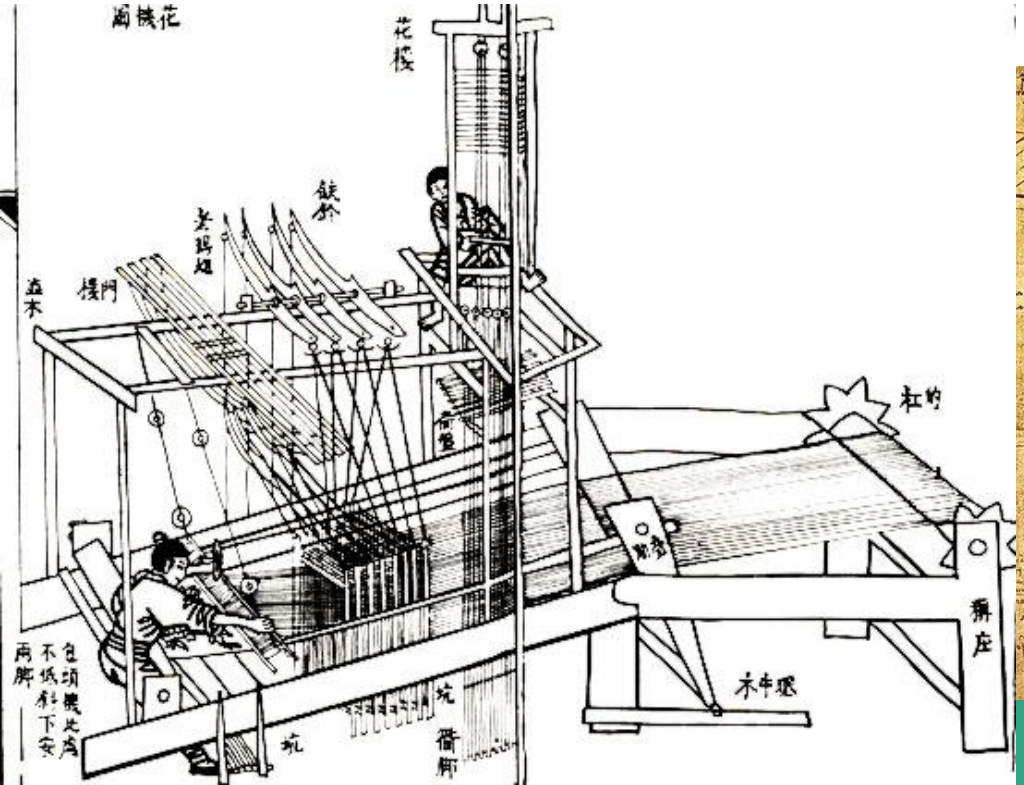

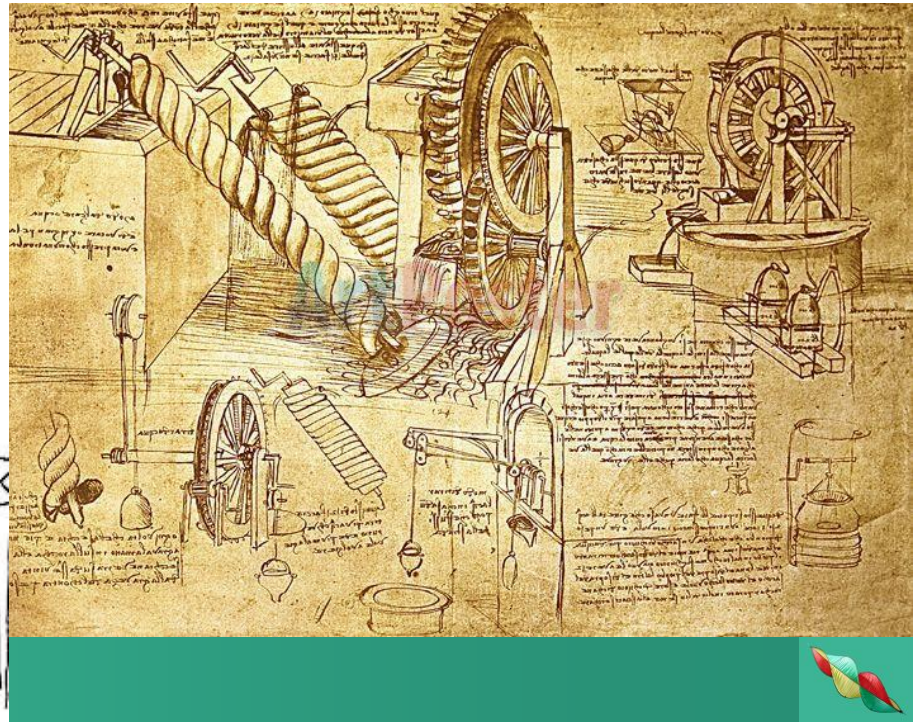

Drawing containing a lot of information:

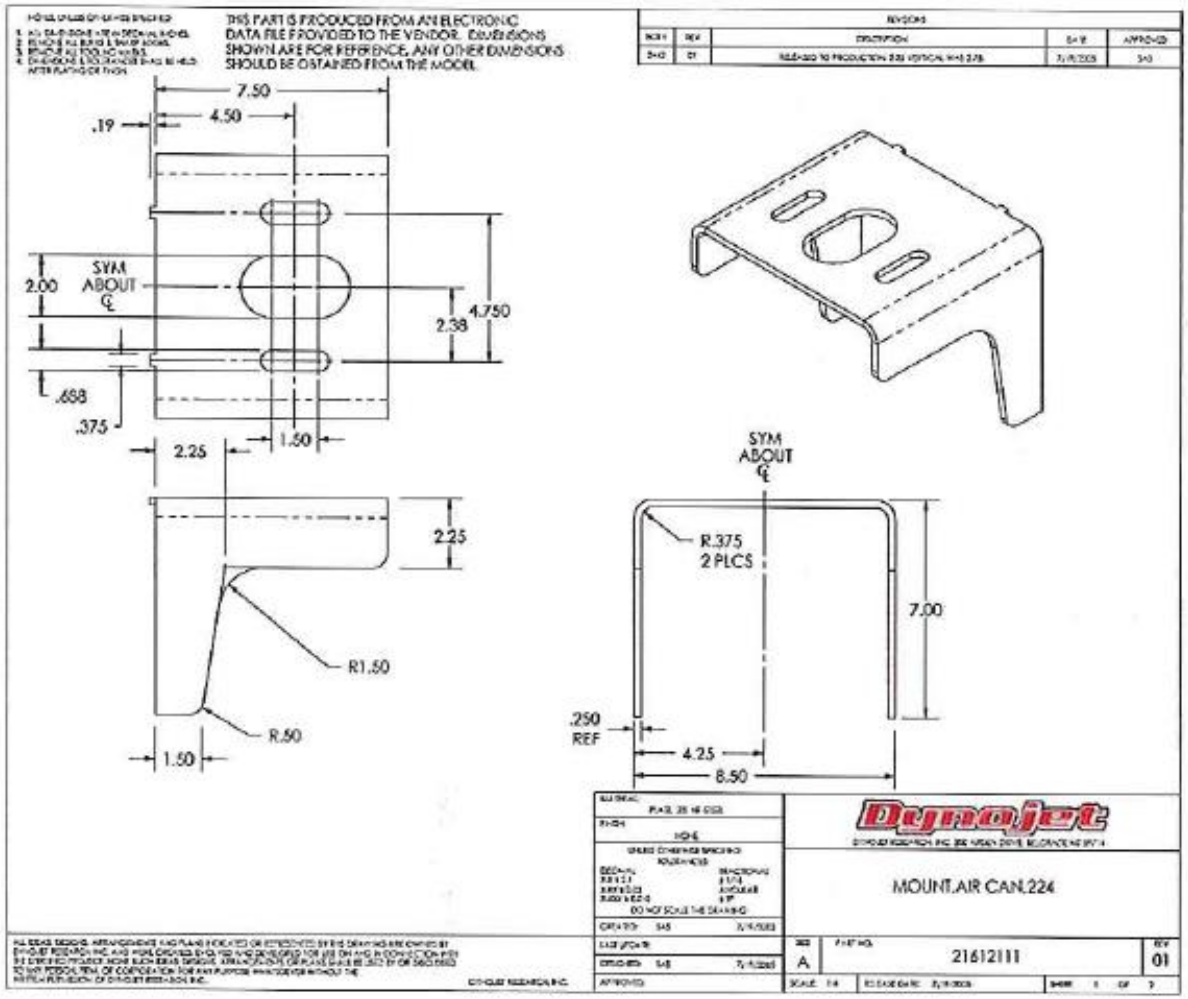

- Calculate
- Manufacture
- Document
- …..

> many documents,
many possible errors

History of CAD.

- <1980
- 1980: introduction of Autocad, first wide spread 2D drawing software
- 1985: introduction of 3D software, first steps towards model oriented software
- 1989: introduction of Pro/Engineer, first commercial parametric modeler.

From drawing oriented to model oriented design.

- Drawing oriented:
  - Paper model
  - Only on paper
  - Multiplication of data
- Model oriented:
  - CAD-model
  - Virtual prototype
  - 1 source of data

Model oriented.

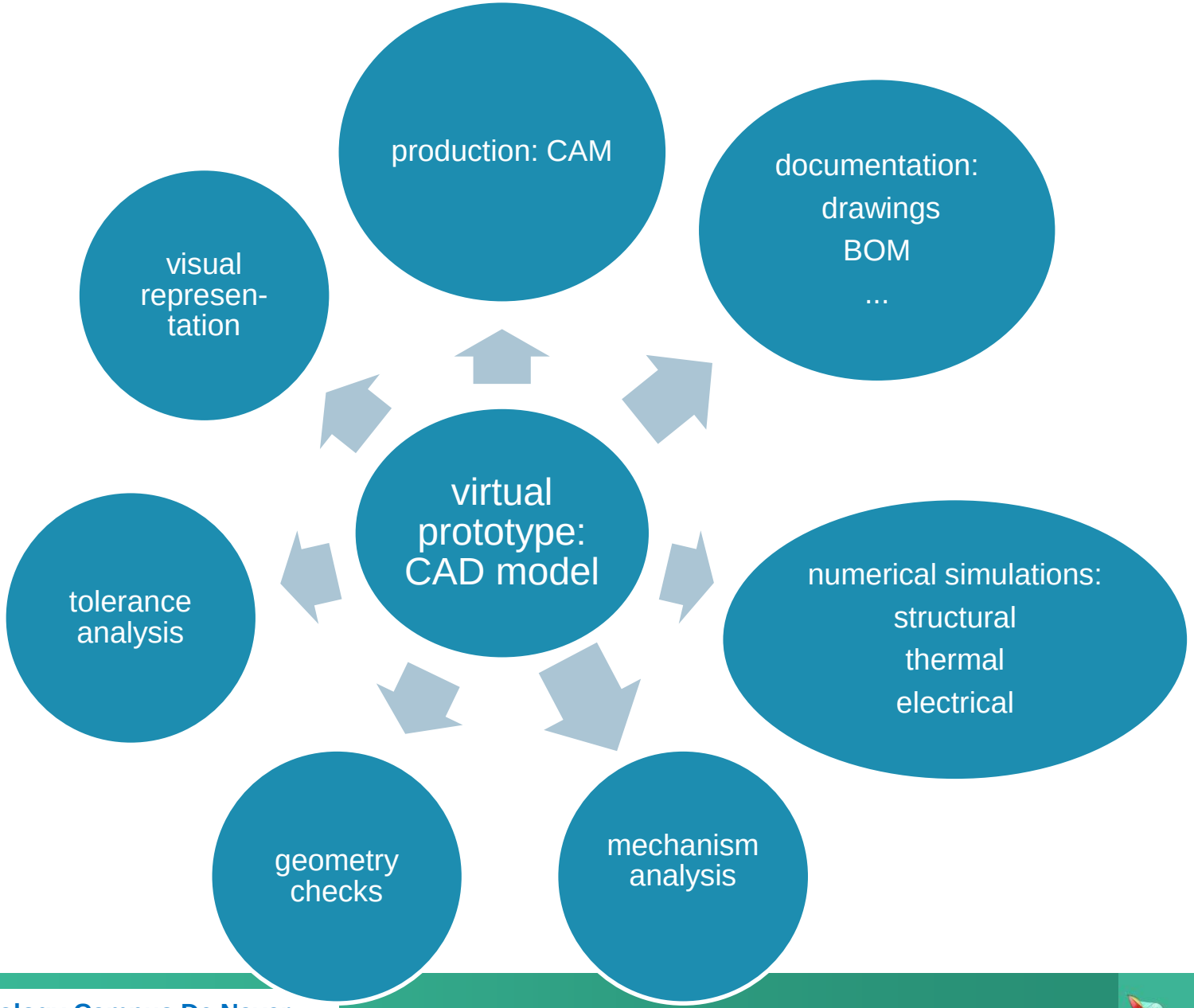

Virtual prototype.

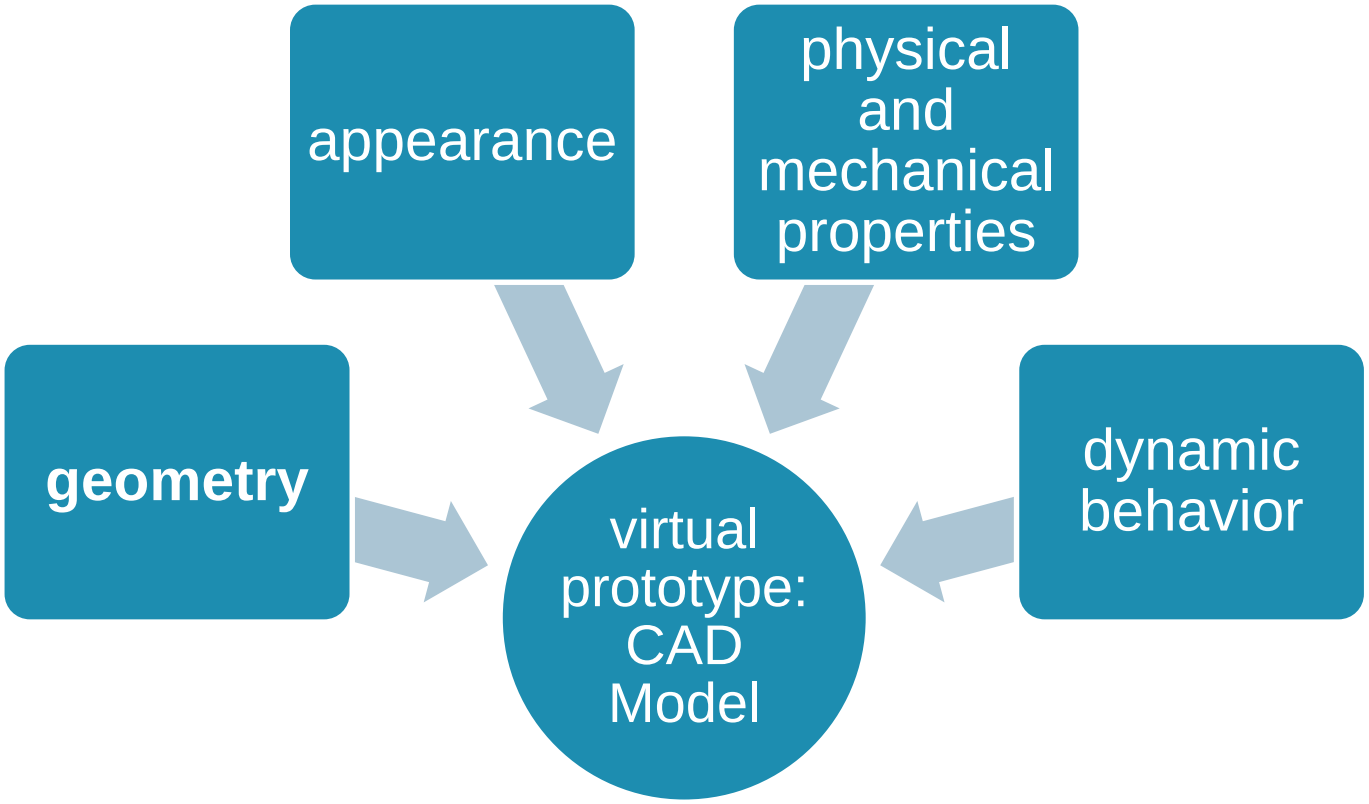

MCAD (Mechanical CAD): CREO/ProEngineer (PTC): Model oriented.

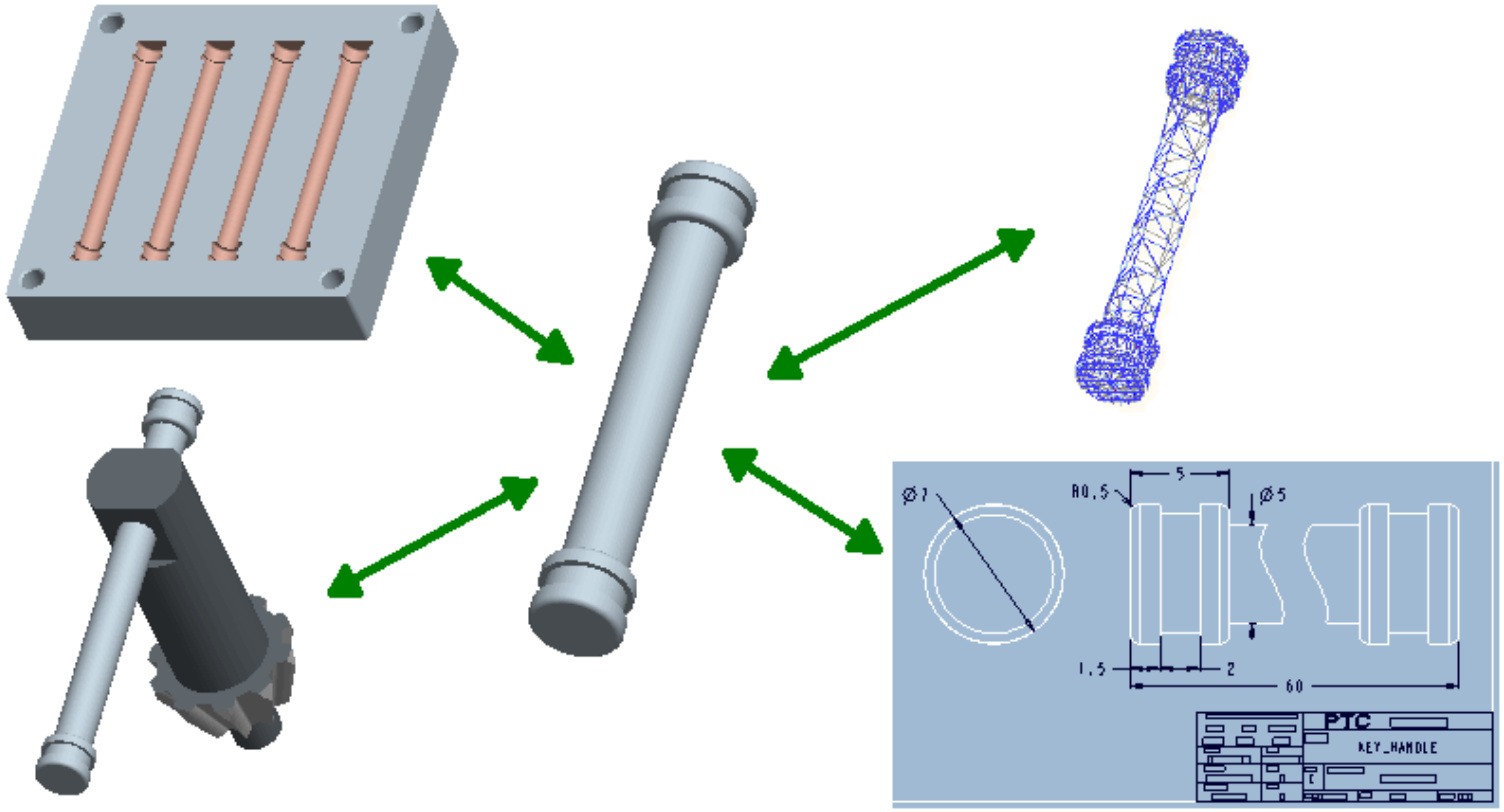

MCAD (Mechanical CAD): CREO/ProEngineer

- No compromise on design
- From simple to complex design

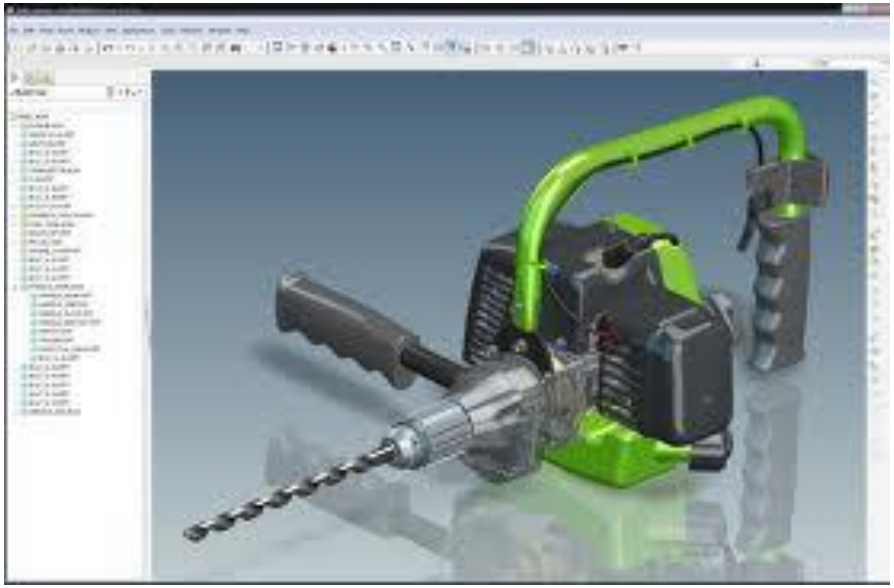

Cable harness: cabling.

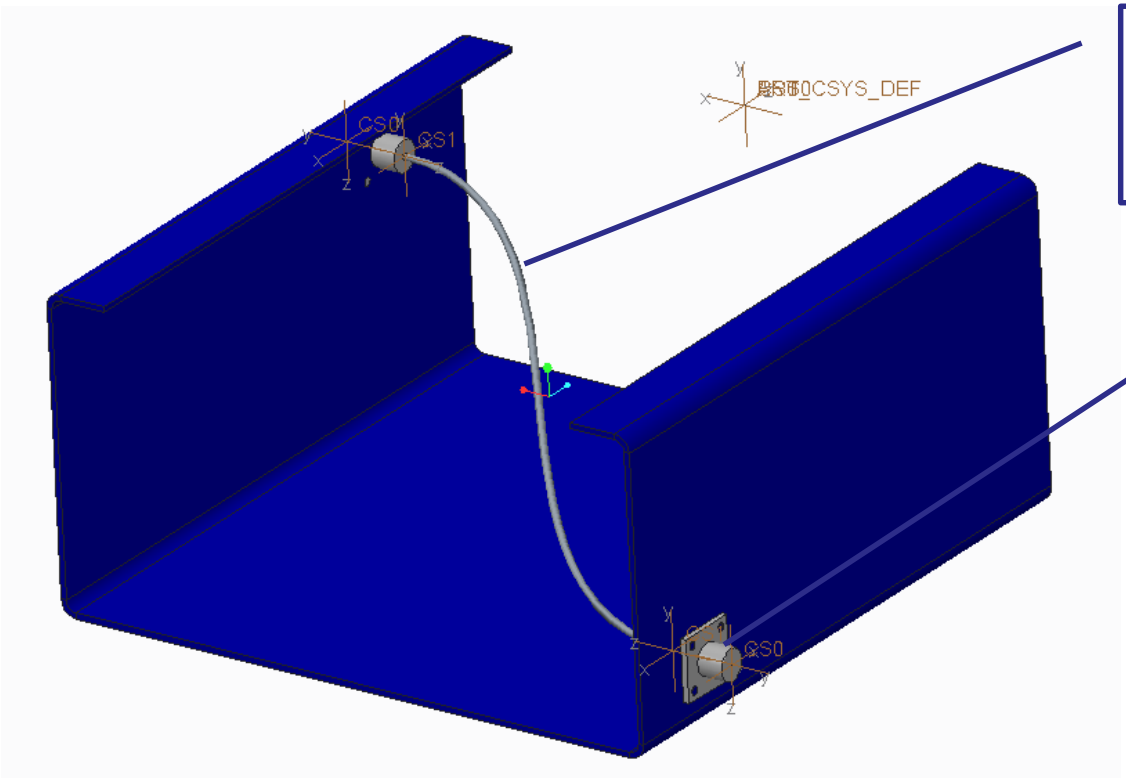

Wire, cable, bundle

Entry ports, connections

Geometry: lengths, electrical logic: paths, connections

Cabling: interfacing hardware

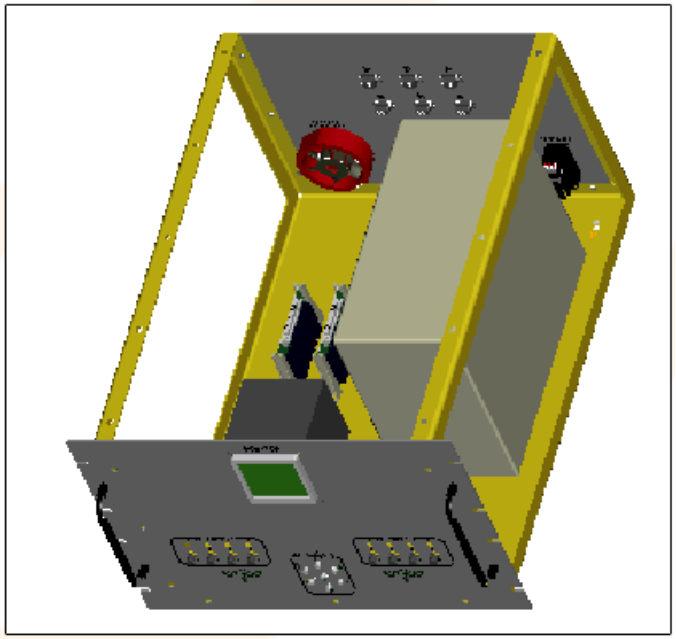

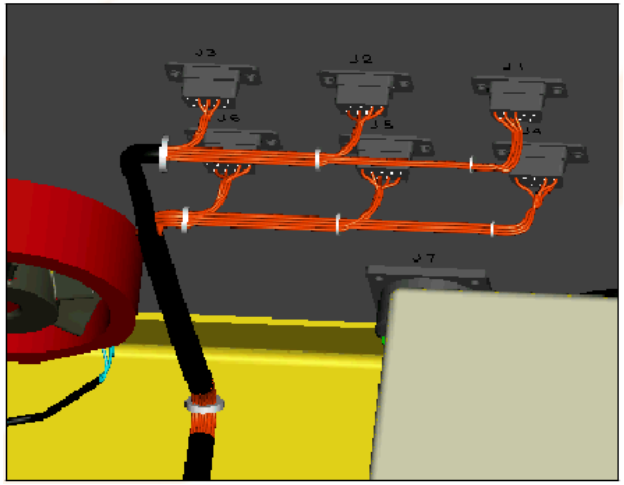

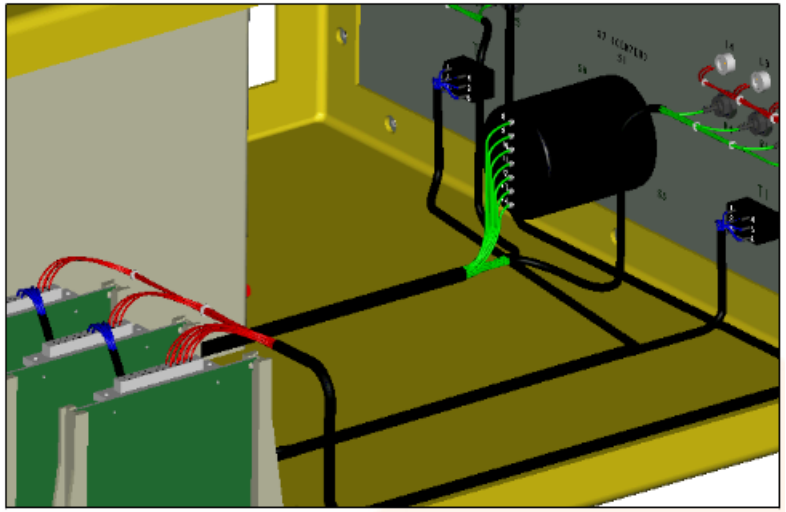

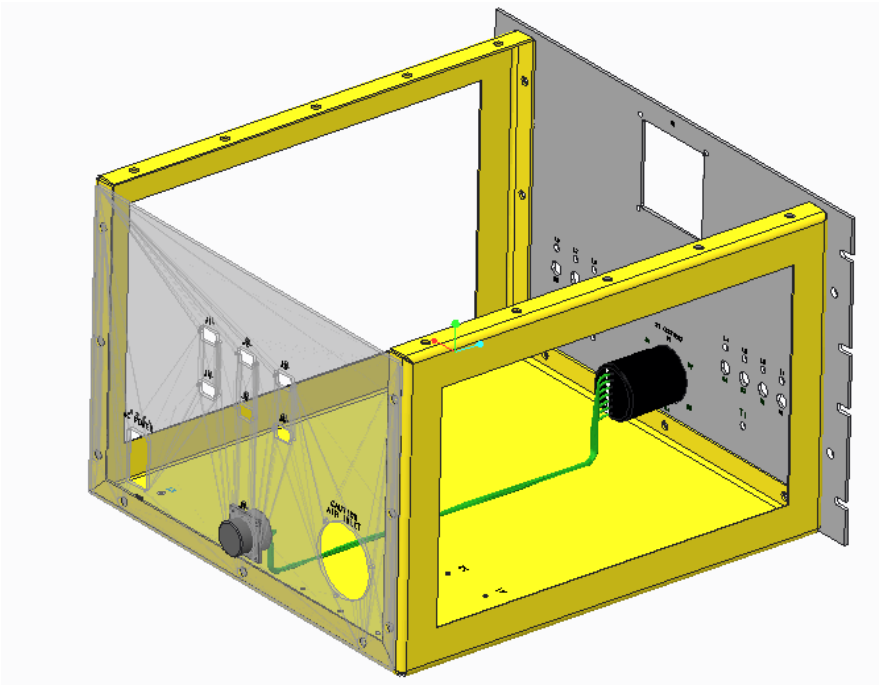

```
HARNESS NAME: H6

CABLE NAME: C6
SPOOL NAME:  SP6

CURRENT LENGTH = 19.4468
MINIMUM BEND RADIUS = 0.2500
THICKNESS = 0.2000
DENSITY = 0.0000e+00

CABLE NAME: C6:W1
CONNECTOR NAMES:
    CONNECTOR_6B (Entry port name: CS0)
    CONNECTOR_6A (Entry port name: CS0)
```

```
CURRENT LENGTH = 19.4468
MINIMUM BEND RADIUS = 0.2500
THICKNESS = 0.0500
DENSITY = 0.0000e+00

CABLE NAME: C6:W2
CONNECTOR NAMES:
    CONNECTOR_6B (Entry port name: CS1)
    CONNECTOR_6A (Entry port name: CS2)

CURRENT LENGTH = 18.9858
MINIMUM BEND RADIUS = 0.2500
THICKNESS = 0.0500
DENSITY = 0.0000e+00

CABLE NAME: C6:W3
CONNECTOR NAMES:
    CONNECTOR_6A (Entry port name: CS6)
    CONNECTOR_6B (Entry port name: CS2)
```

Framework extension:

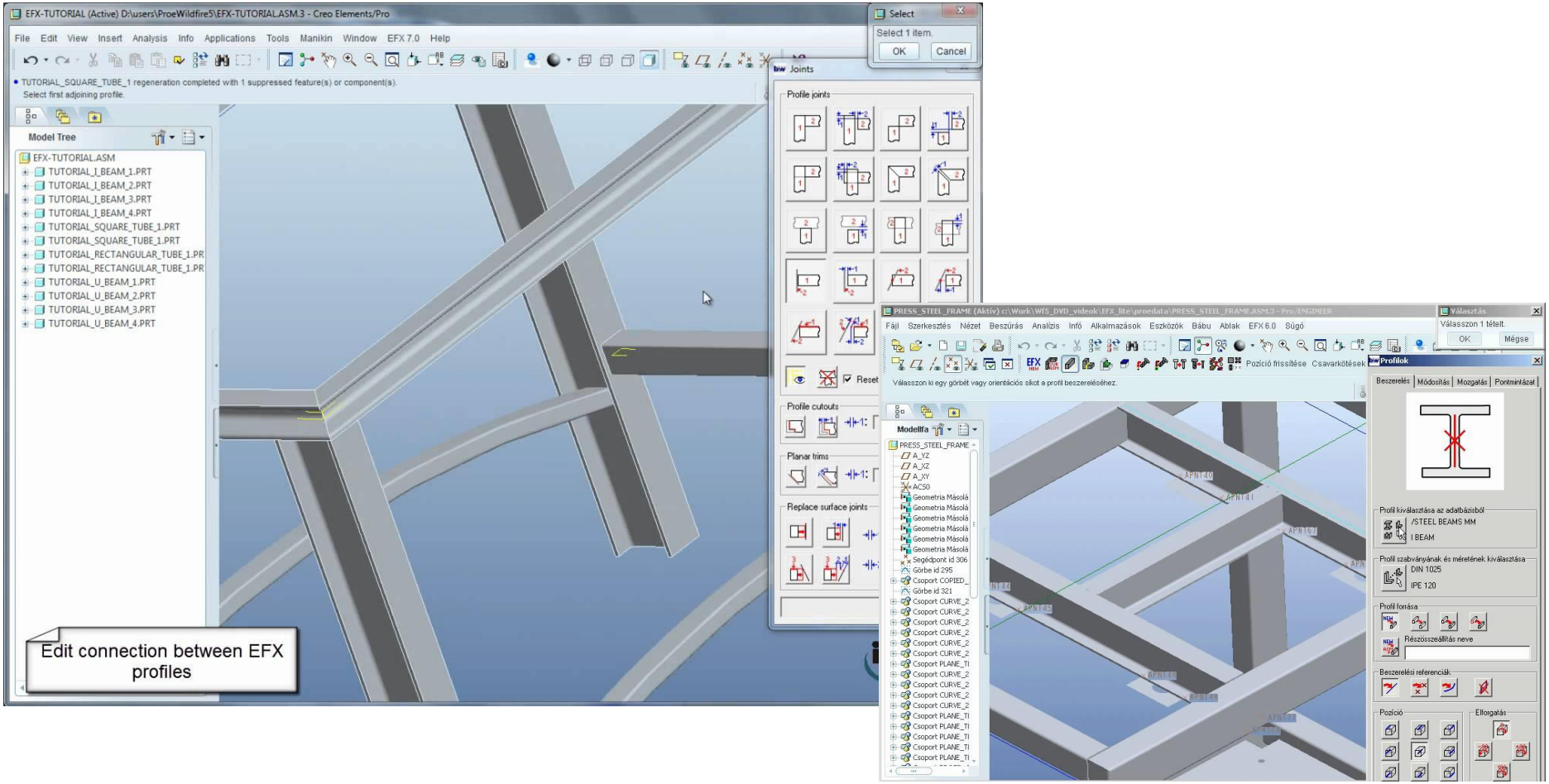

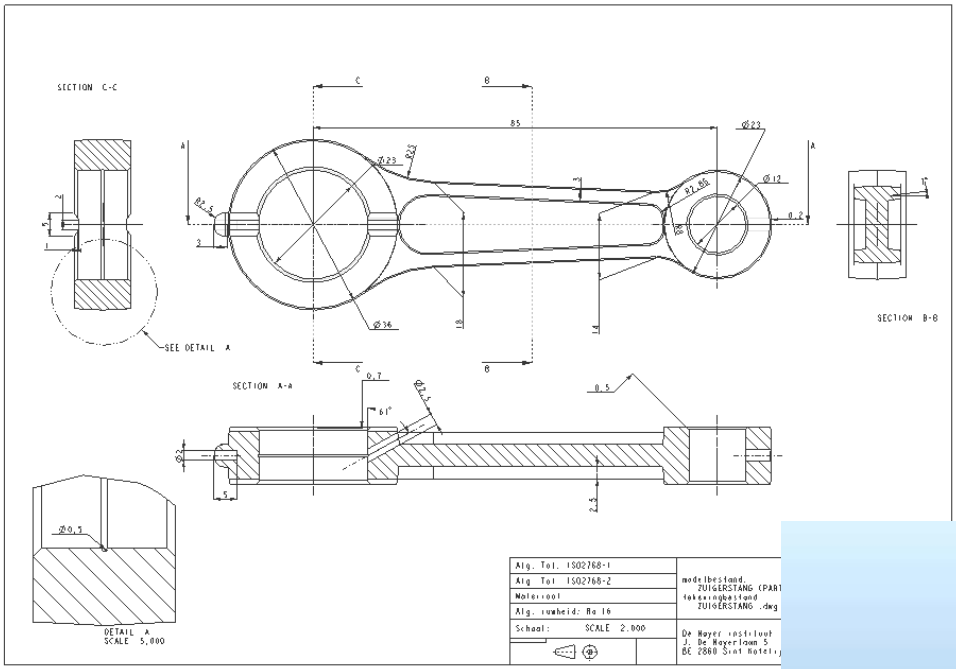
SECTION C-C
SEE DETAIL A
SECTION A-A
SECTION B-B
DETAIL A
SCALE 5,000
Alg. Tol. ISO2768-1
Alg. Tol. ISO2768-2
Materiaal
Alg. ruwheid: Ra 16
Schaal: SCALE 2.000

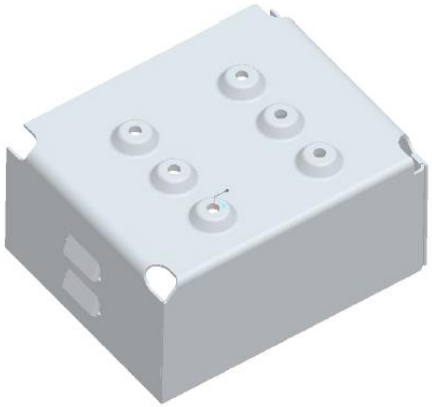

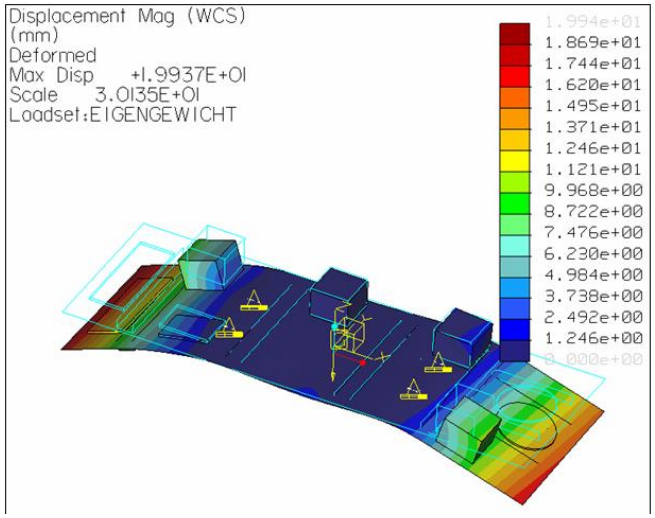
Displacement Mag (WCS)
(mm)
Deformed
Max Disp +1.9937E+01
Scale 3.0135E+01
Loadset:EIGENGEWICHT
1.994e+01
1.869e+01
1.744e+01
1.620e+01
1.495e+01
1.371e+01
1.246e+01
1.121e+01
9.968e+00
8.722e+00
7.476e+00
6.230e+00
4.984e+00
3.738e+00
2.492e+00
1.246e+00
0.000e+00

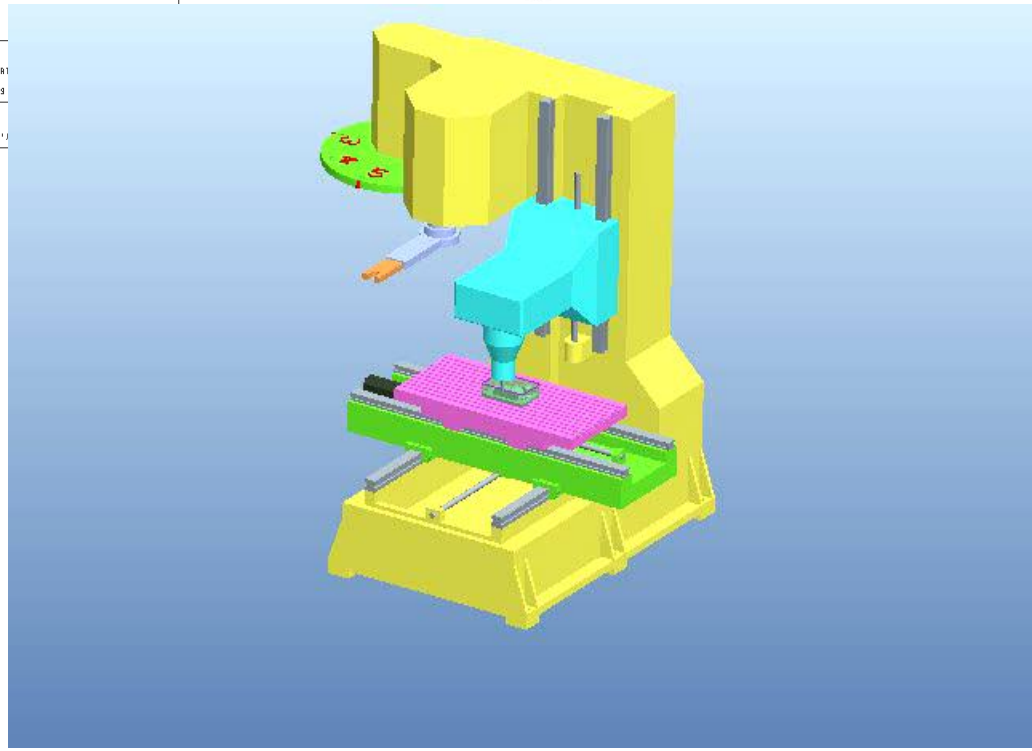

Complex design study

- Scalemodel 1/10 steam engine

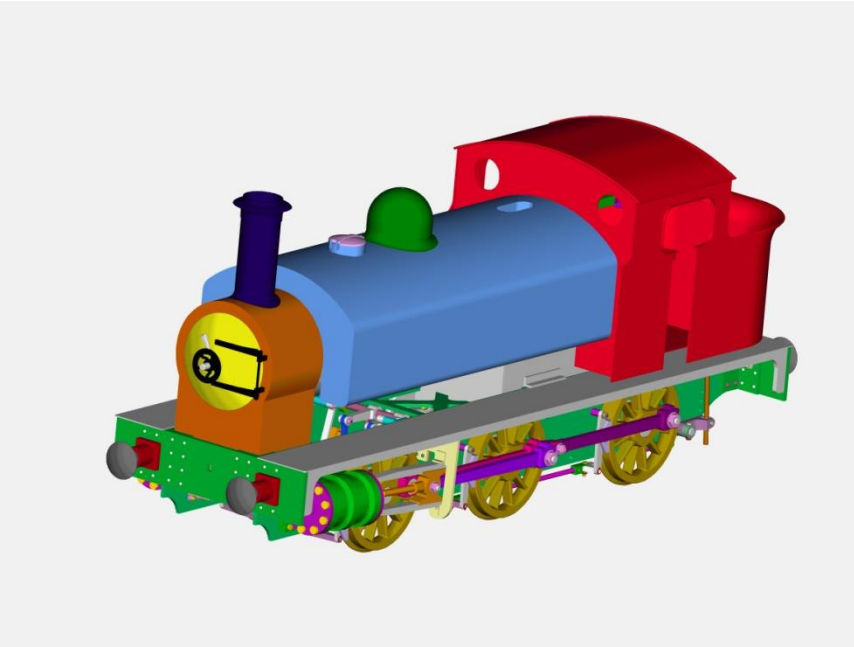

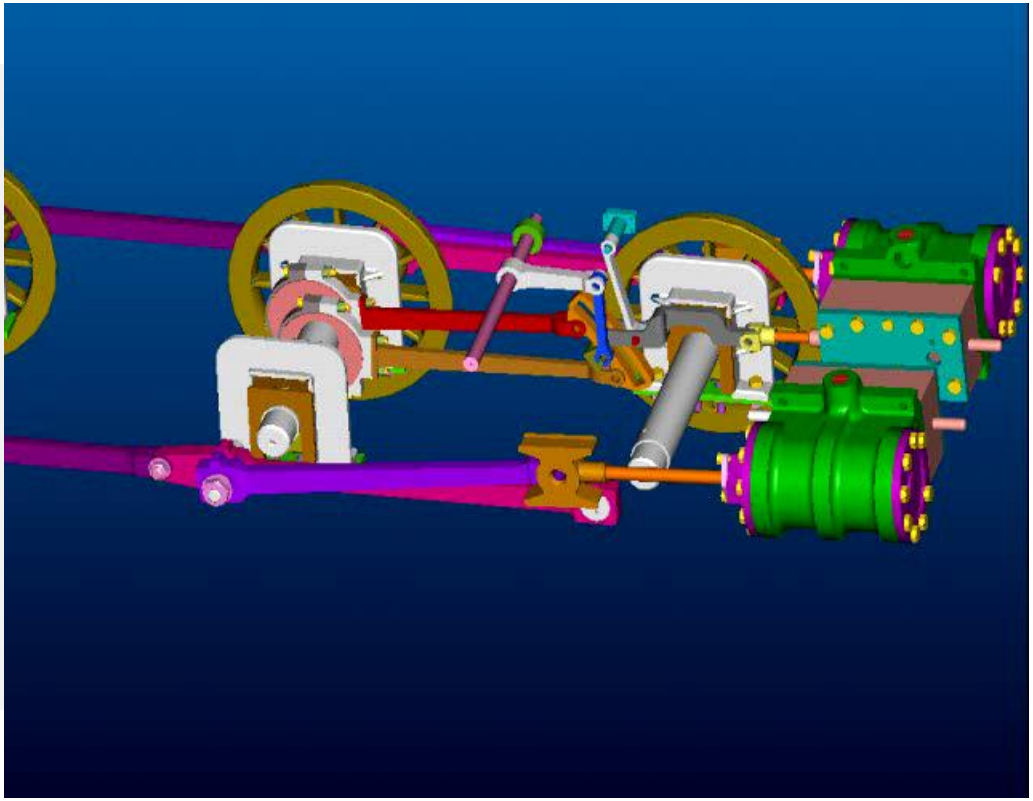

Manufacturing.

- Creating toolpaths
- Simulation
- First-time right

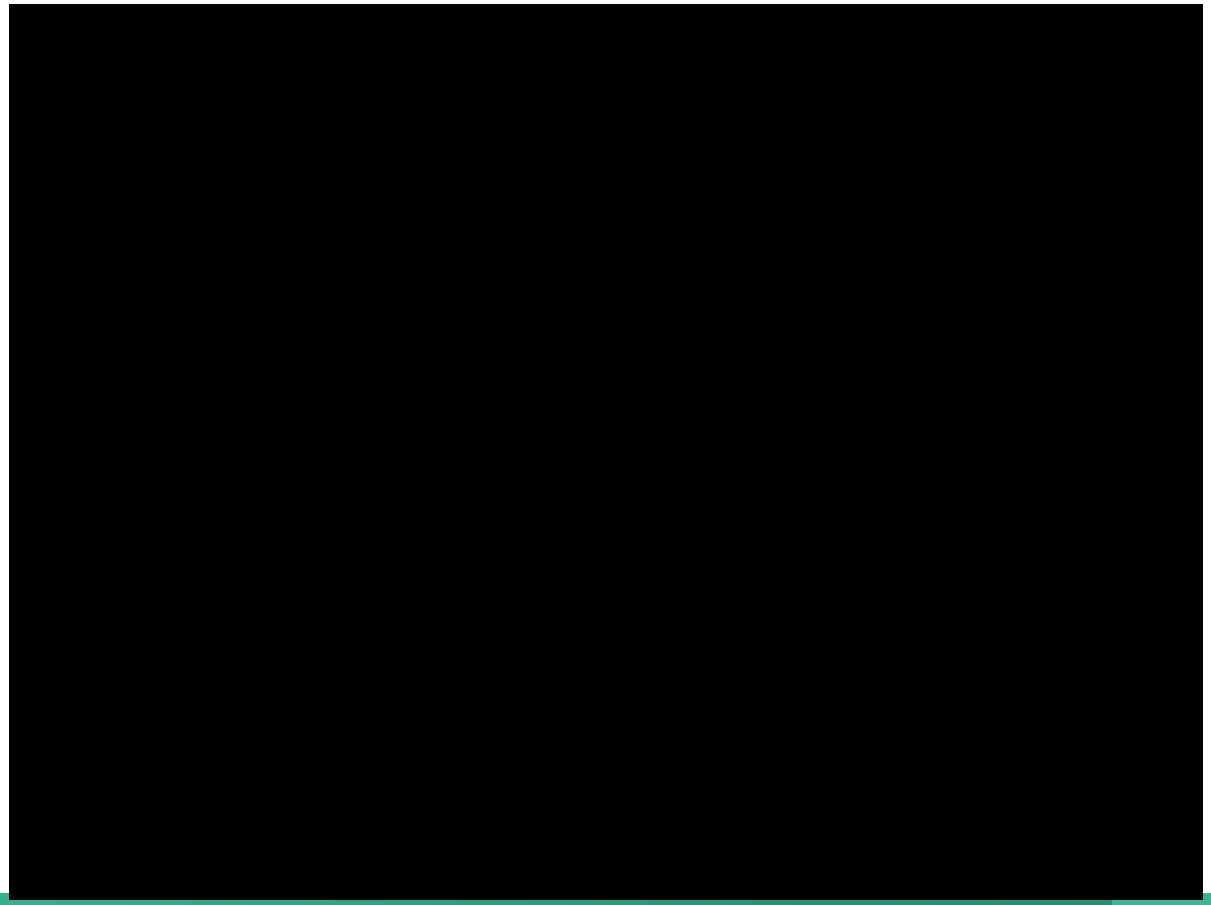

Air compressor

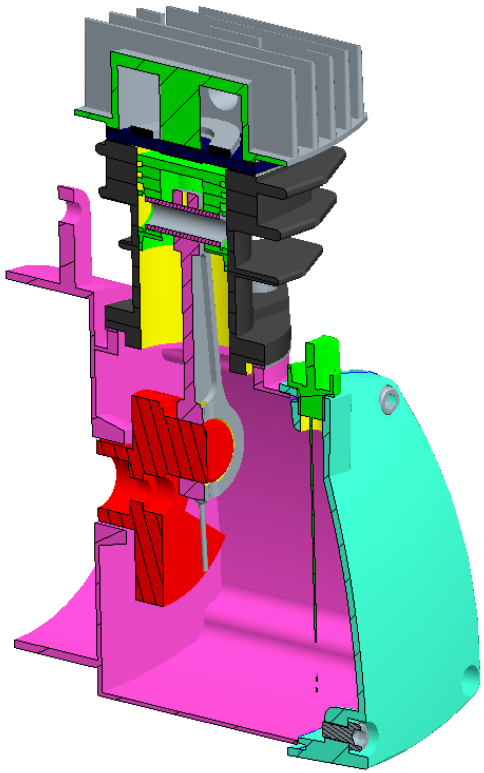

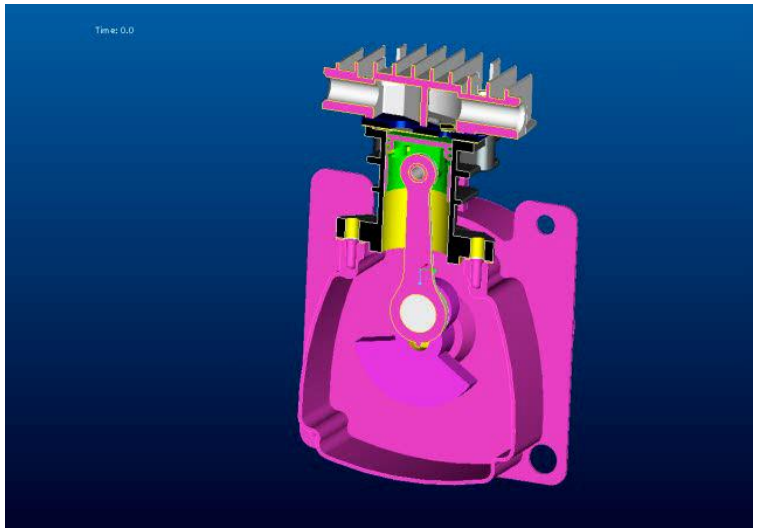

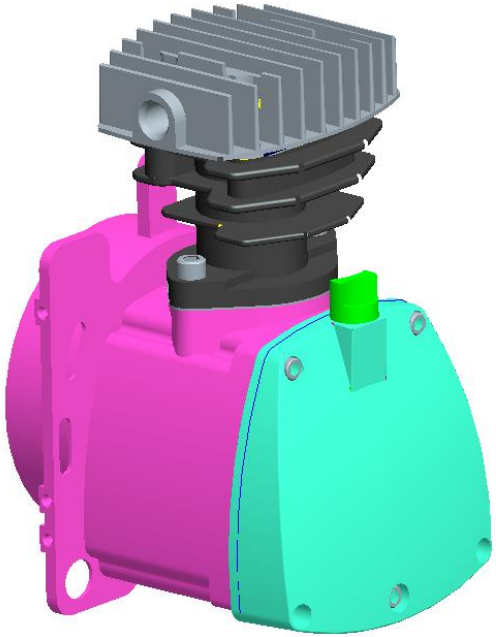

Parametric: dimensions drive the design

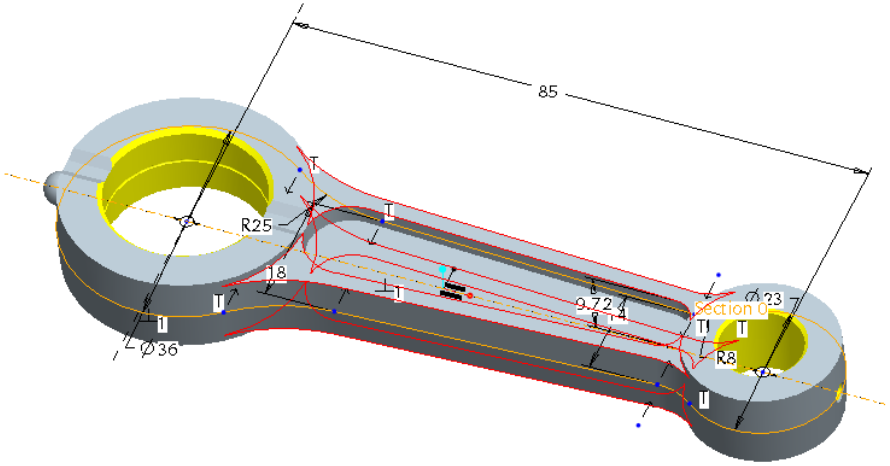

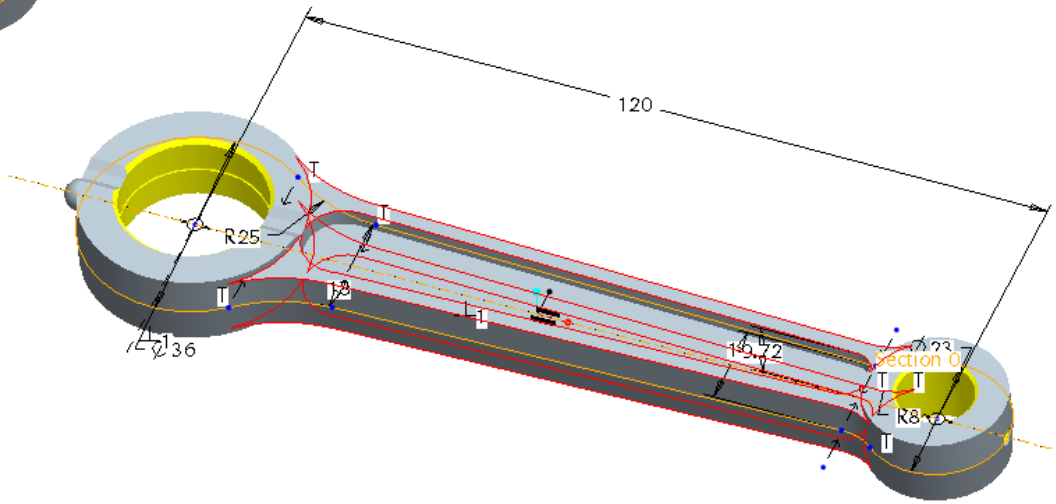

Associative

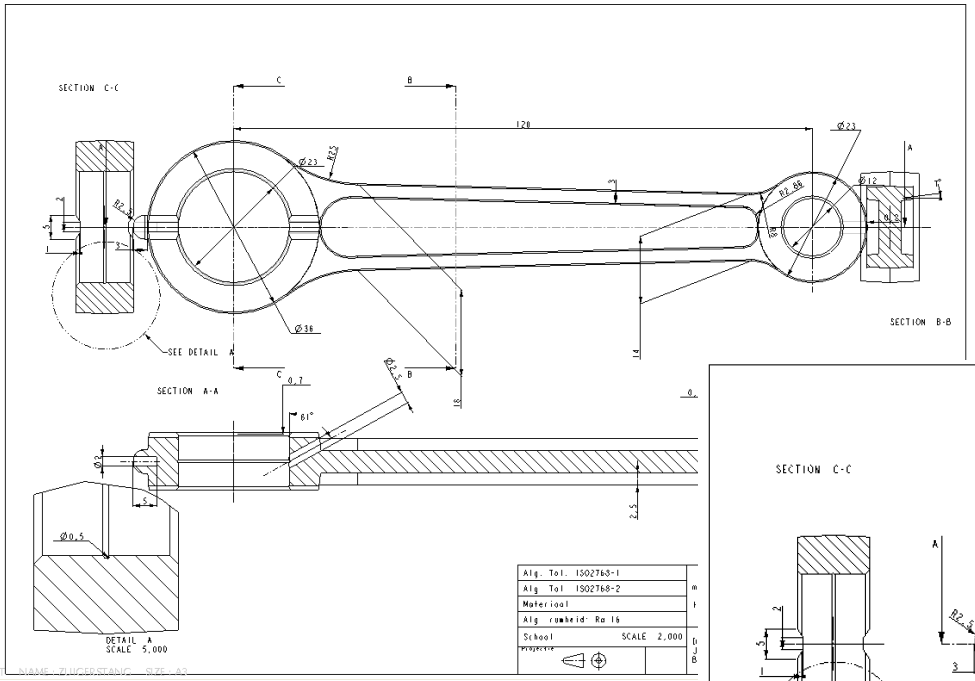

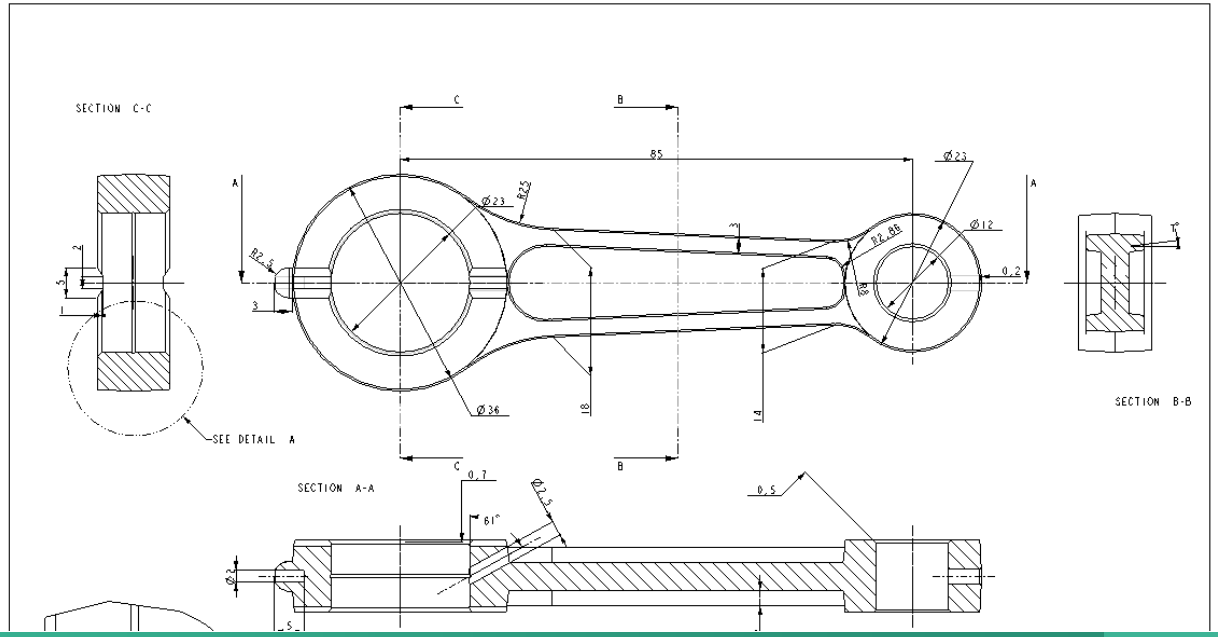

CREO: fundamentals

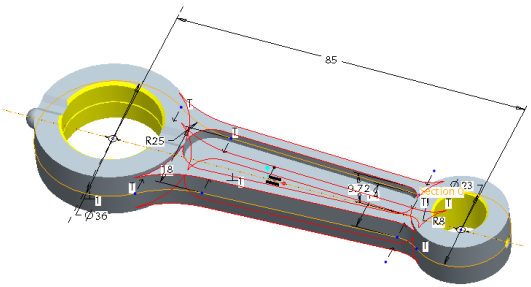

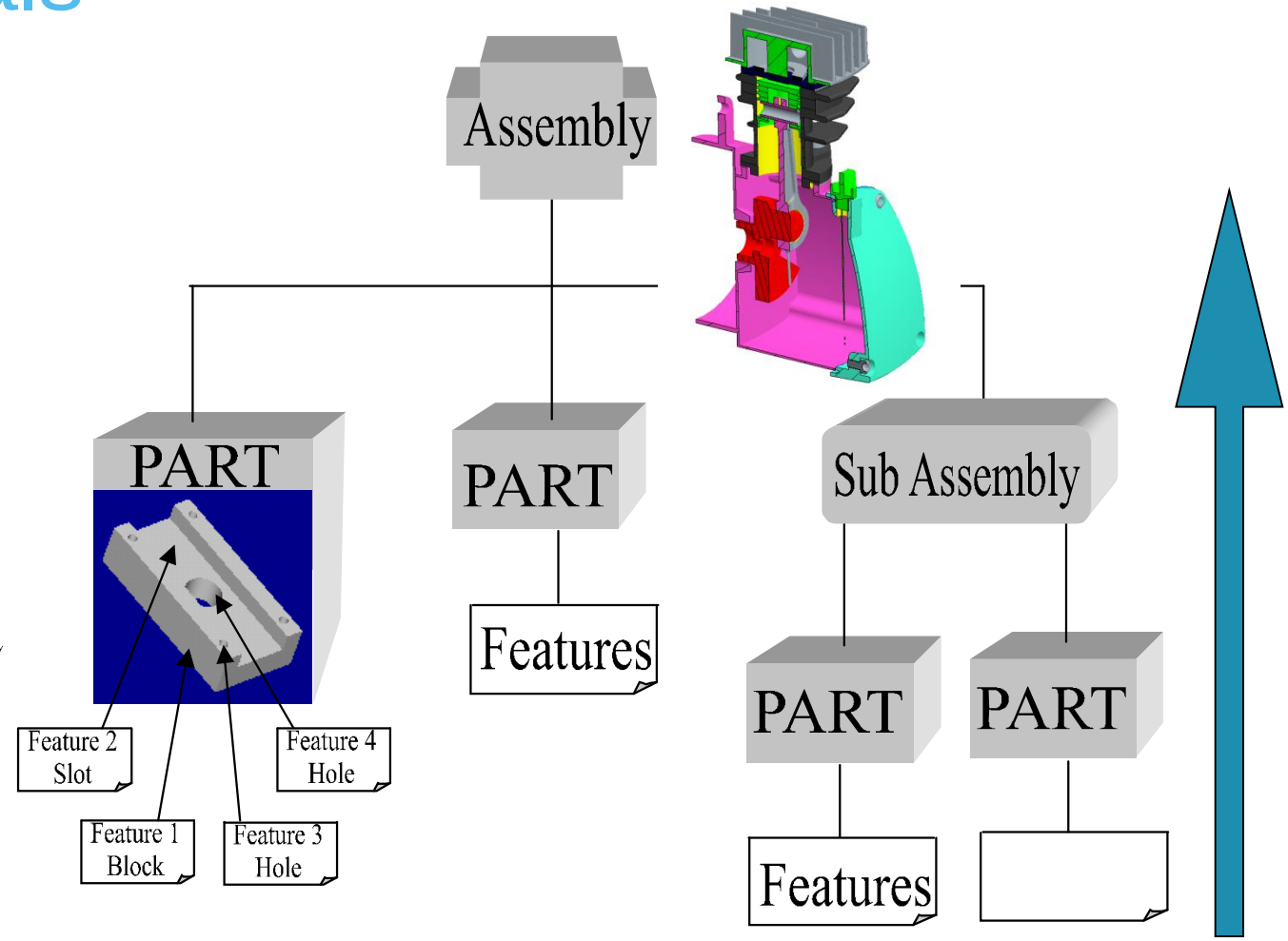

Some student examples:


GARNIER
Ultra
DOUX
SHAMPOOING

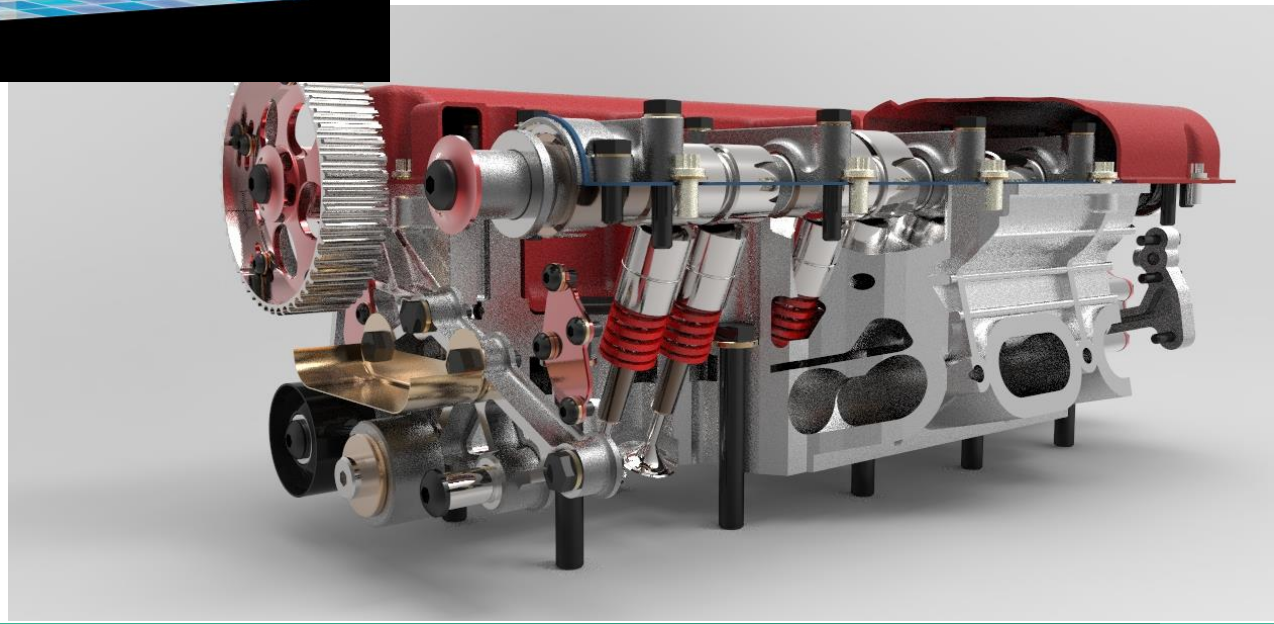

Case study: car jack.

- Aim: make a car jack, able to lift the car.
  - Force to operate not too big
  - Light weight (cost, maneuverability)
  - Strong enough to withstand operation

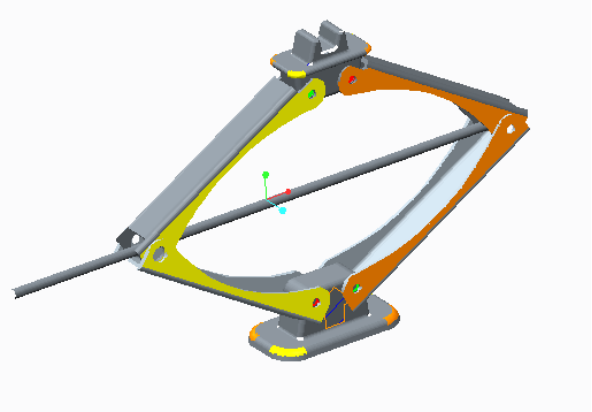

Design parts

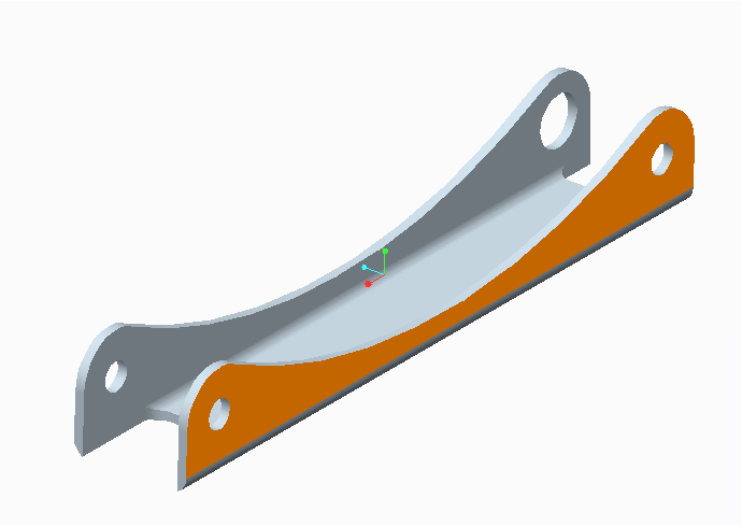

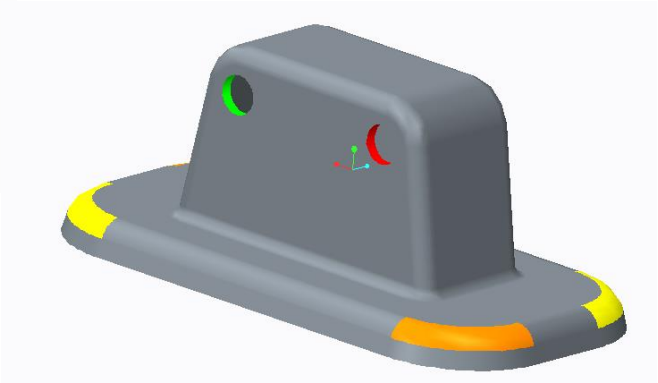

Make assembly

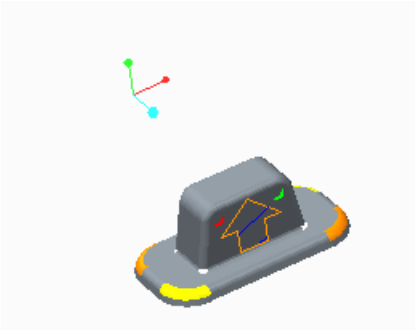

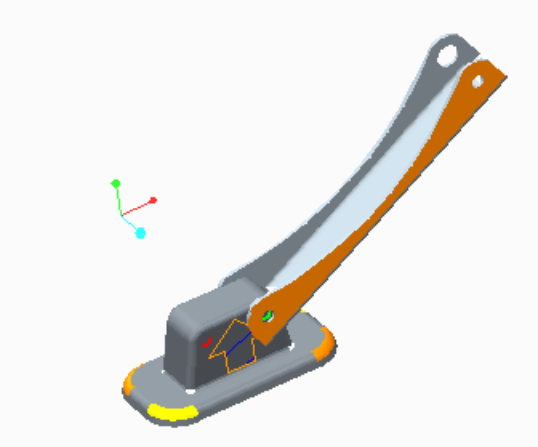

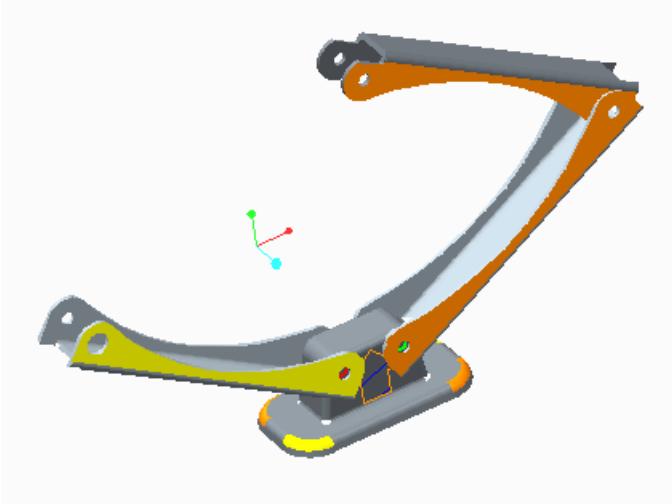

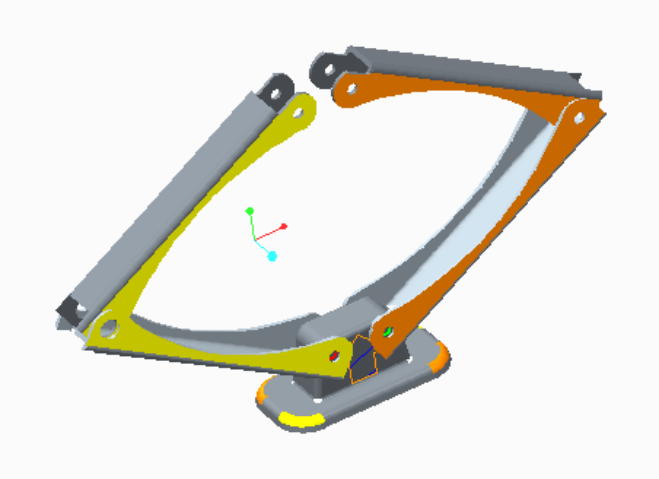

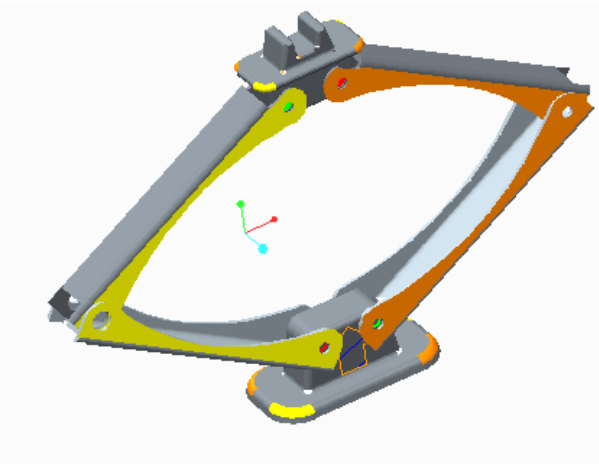

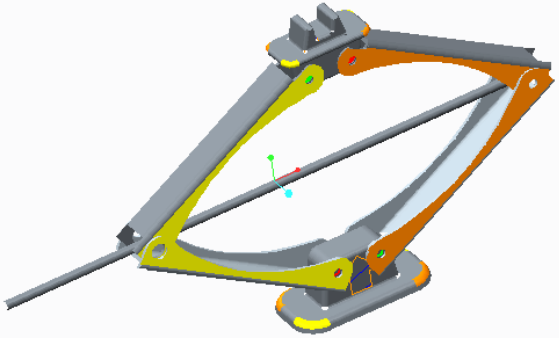

Make mechanism

- Include:
  - Motors
  - Measures
  - Conditions
  - …

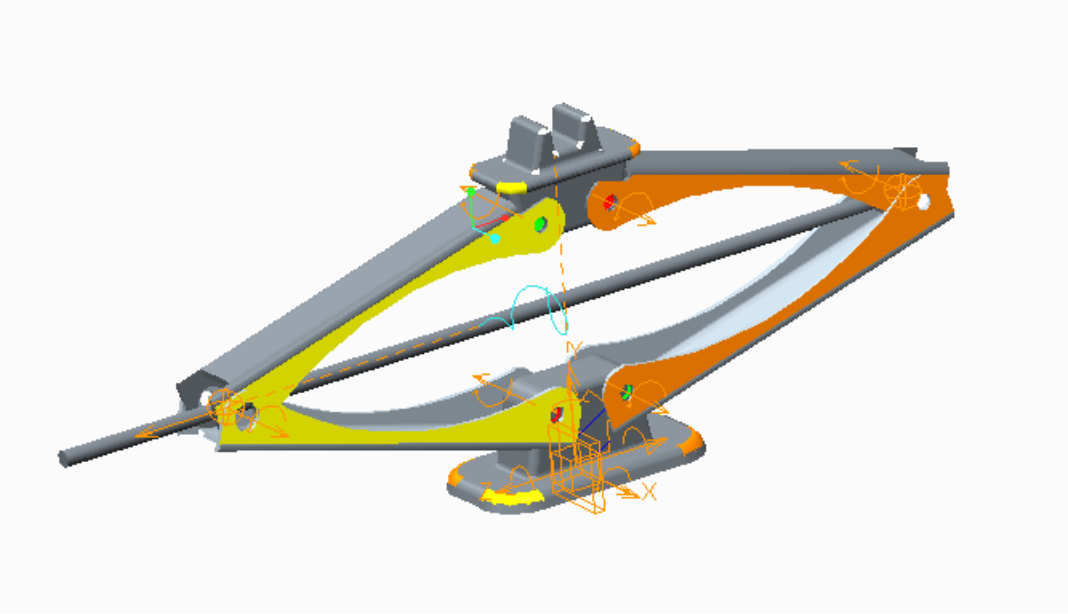

Mechanism analysis.

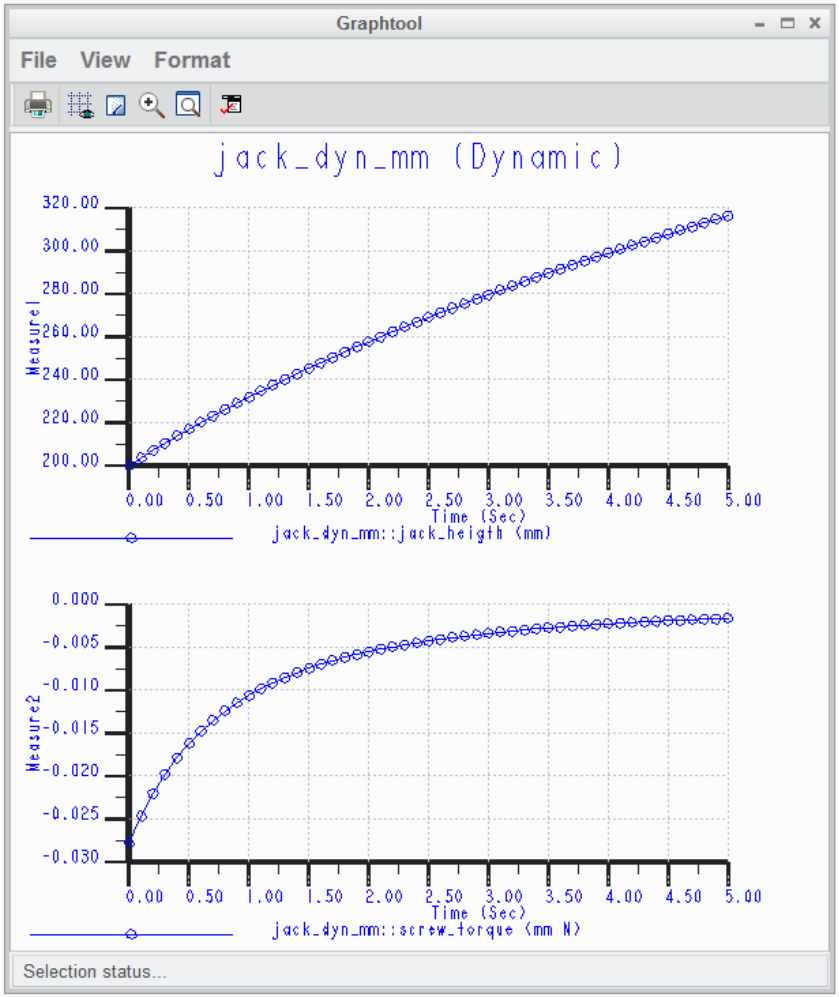

Strength analysis

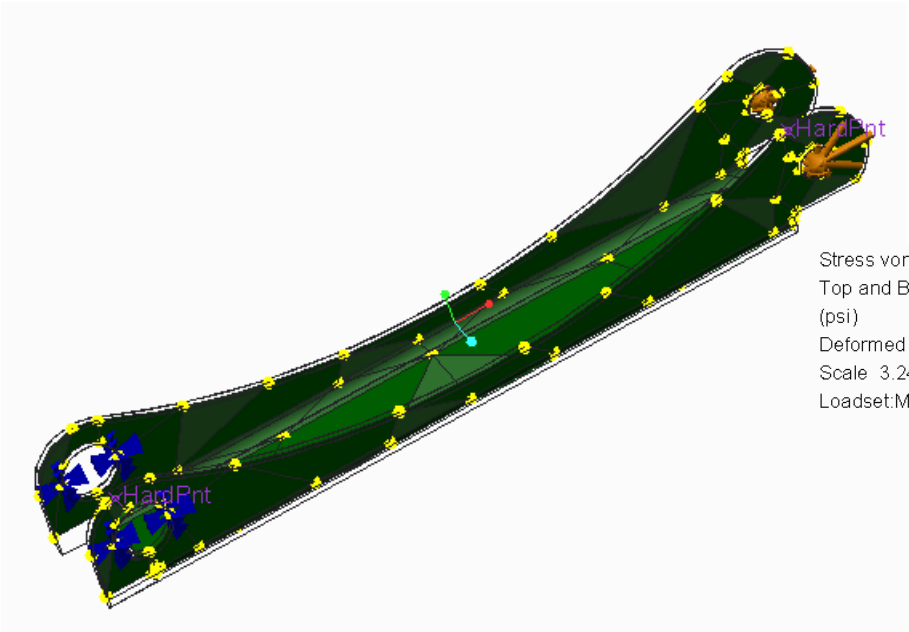

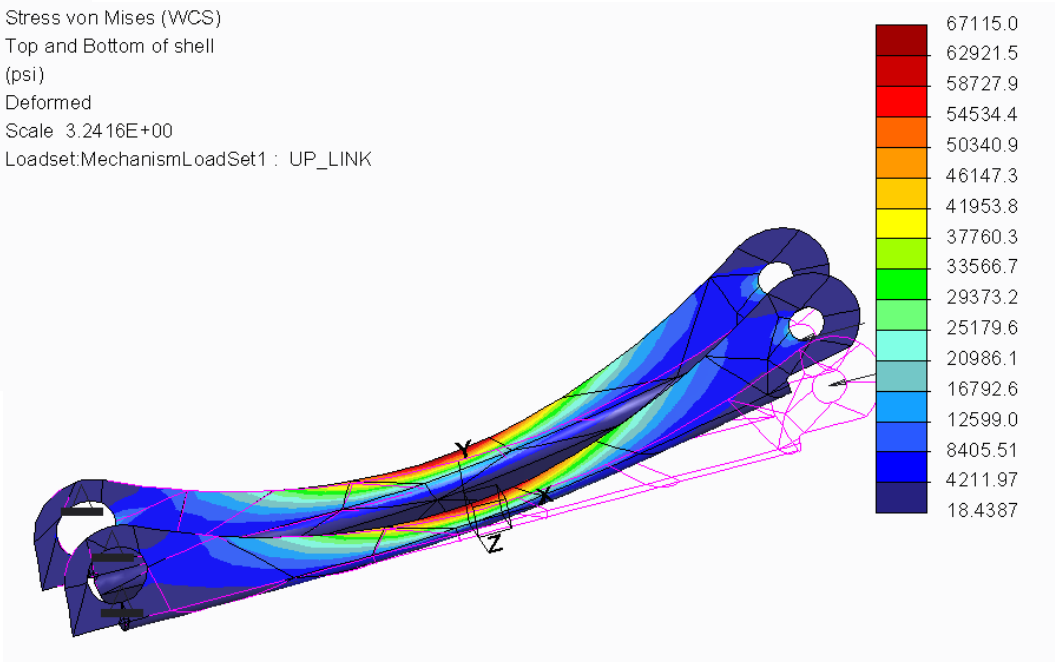

Make documentation

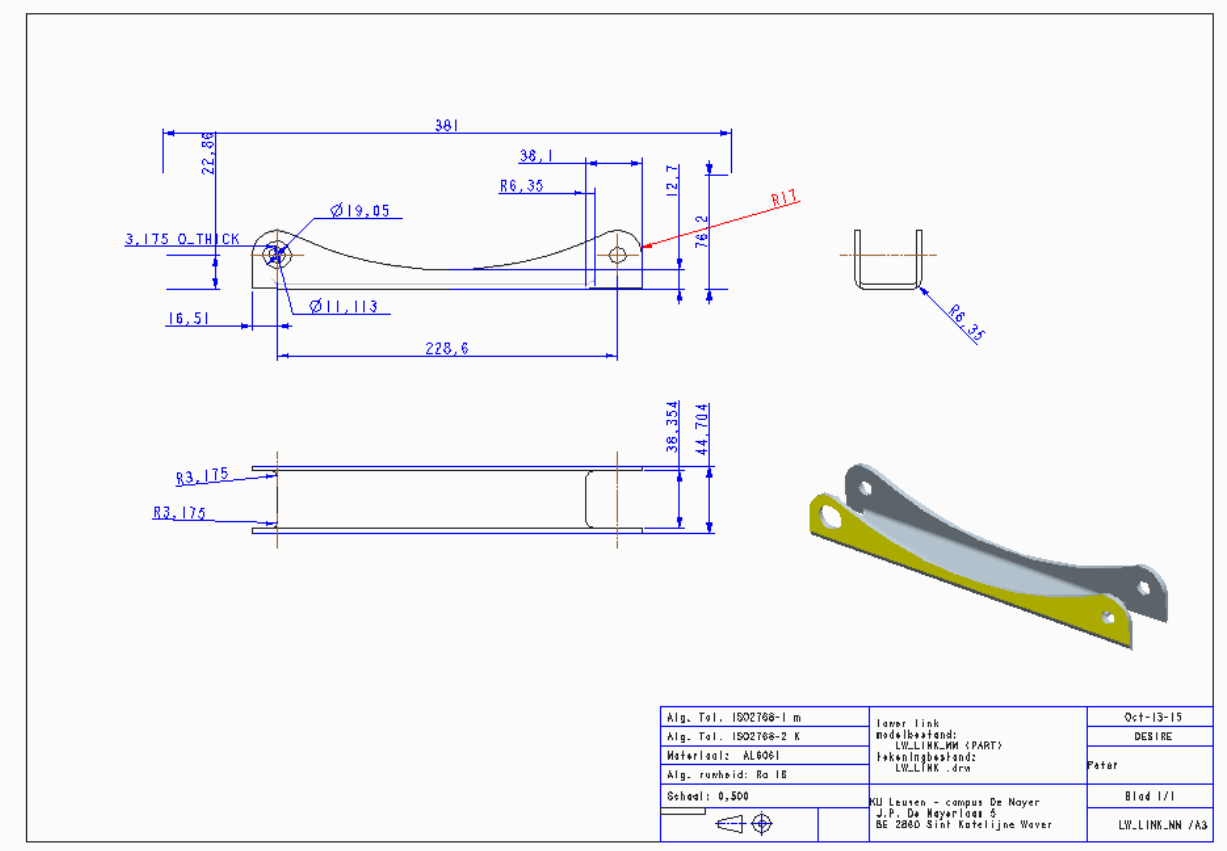

Time for a demo.

Questions?

Contact

Dr. Ing. Peter Arras
contact
MCAD/CAE
Peter.Arras@kuleuven.be